comprex

Pulse300

The mobile Comprex® Unit Pulse300 is suitable for cleaning industrial systems, equipment, and apparatus using patented cleaning technology.

- **Mobile and versatile**
  thanks to compact dimensions
- **Mechanical cleaning with flow direction change**
  without the use of chemicals
- **Integrated touchscreen control**
  with intuitive user interface
- **Illuminated sight glass**
  for assessing cleaning progress
- **Versatile connection options**
  thanks to standardized adapter connections

Comprex Engineering GmbH
Albert-Einstein-Str. 14a • D-76829 Landau i.d.Pfalz • +49 6341 3803-114 • engineering@comprex.de • comprex.de/en/products

comprex

Pulse300: Outside dimensions. Inside performance.

Dimensions

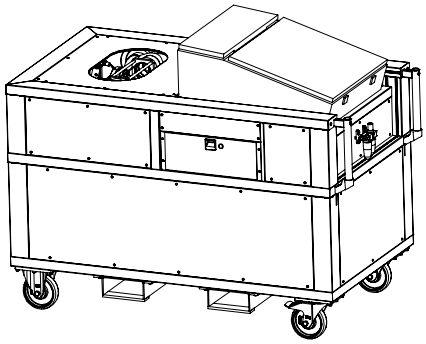

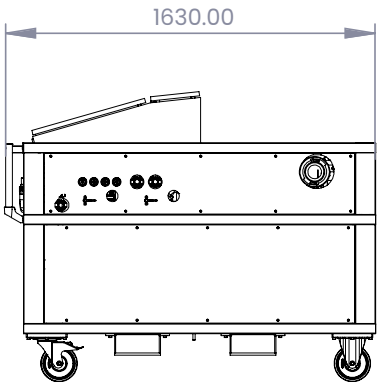

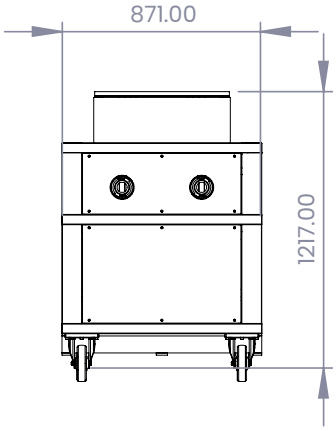

Specifications

Applicable nominal diameter	DN 50 ... DN 150
Media supply	Compressed air / water / electrical energy
Permissible media temperature	50 °C
Nominal pressure rating	PN 10
Standard connections	Storz-C DIN 14301, Geka DIN 3489
Minimum water supply pressure	2 bar
Water requirement	< 15 m^3/h
Minimum air supply pressure	5 bar
Compressed air requirement	< 22 Nm^3/min
Supply voltage	110 V AC / 230 V AC
Internal voltage	24 V DC
Power consumption	< 300 W
Control	Manual via touchscreen
IP rating	IP54
Weight	450 kg

We love challenges!
In addition to standard solutions, we work with you to develop customized systems that are perfectly suited to your processes. Contact us – we will find the right solution for you.

This is how our patented Comprex® process works:

Comprex Engineering GmbH
Albert-Einstein-Str. 14a • D-76829 Landau i.d. Pfalz • +49 6341 3803-114 • engineering@comprex.de • comprex.de/en/products